# International Institute of Information Technology, Hyderabad

**(Deemed to be University)**

## Intro to VLSI and Embedded Systems

## End Exam

**Max. Time: 90 min** **Max. Marks: 45**

Q1. Consider the block diagram shown in the Figure. $v_{in}(f)$, $n(f)$, $f_\phi$ and $f_{BW}$ are the input signal spectrum, noise spectrum, frequency of the square wave (50% duty cycle) and bandwidth of the amplifier, respectively. It is given that $f_{sig} = 20$ Hz, $f_{BW} = 6$ kHz and $f_c = 1$ kHz, respectively, and the DC gain of the amplifier is 5.

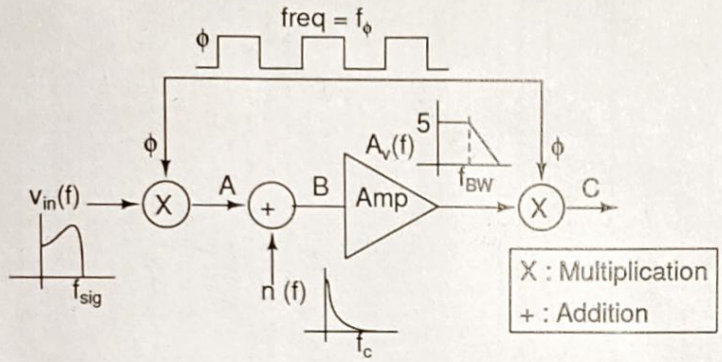


(a) Discuss the utility of the scheme shown in the figure. [3]
(b) Suggest a suitable value for $f_\phi$ with proper reasoning. [2]
(c) Draw the spectra at A, B and C for the suggested $f_\phi$. [4]

[9 marks]

Q2. Explain in 1-2 lines:

A. The principle behind working of (a) Piezoelectric sensor (b) Photo-diodes (c) Resistance based temp detector (d) CCD camera [6 marks]
B. (a) Accuracy vs Precision (b) Sensitivity [3 marks]

[9 marks]

Q3. What are the driving forces for domain specific accelerator adoption [4]? Comment on a specific trade-off between general purpose processor architecture versus fixed-function accelerator architecture [5].

[9 marks]

Q4. Q. Explain why the yield of an integrated circuit generally decreases as the die size increases. Support your answer using the defect density concept.

[9 marks]

Q5. List the advantages and disadvantages of CMOS technology scaling [4]. Elaborate the advantages by mathematically determining scaled time-delay, device density and gate power [5].

[9 marks]